3300W CCM Bidirectional Totempole with 650V CoolSiC™ Gen 2 (EVAL_3K3W_TP_PFC_SIC2)

IFAM PSS PS HV TM IND CON

Table of content

1 Introduction

2 Digital control for totempole PFC

3 PFC mode specifications and measurements

4 Inverter mode specifications and measurements

5 Summary

Copyright © Infineon Technologies AG 2024. All rights reserved.

Table of content

1 Introduction

2 Digital control for totempole PFC

3 PFC mode specifications and measurements

4 Inverter mode specifications and measurements

5 Summary

Copyright © Infineon Technologies AG 2024. All rights reserved.

Introduction

- EVAL_3K3W_TP_PFC_SIC2 is a system solution based on Infineon superjunction (CoolMOS™) and wide band-gap (CoolSiC™) power semiconductors, drivers and microcontroller for a bridgeless totempole power factor corrector (PFC) with bidirectional capability.
- The board is intended for highest efficiency (99.2%) and high power density (73W/in^3) applications: high-end server and telecom. In addition, the bidirectional power flow capability enables battery chargers or battery formation applications.

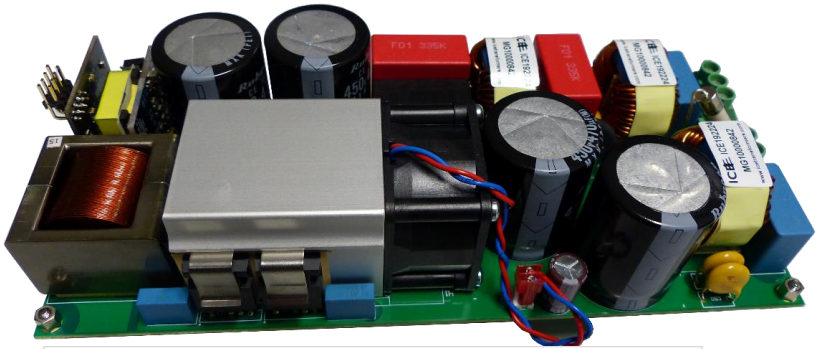

- Summary of features:
  - High line input voltage: 176V – 265V
  - Output voltage: 400V
  - Output power: 3300W
  - CCM PFC operation at 65kHz
  - 99.2% peak efficiency

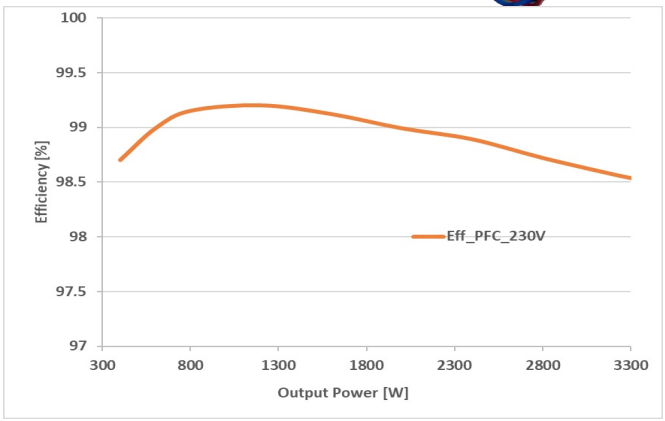

Copyright © Infineon Technologies AG 2024. All rights reserved.

Block diagram with Infineon components

- Infineon components in EVAL_3K3W_TP_PFC_SIC2:
  - 650 V CoolSiC™ (IMZA65R050M2) Silicon Carbide MOSFET
  - 600 V CoolMOS™ C7 (IPW60R017C7) superjunction (SJ) MOSFET
  - 2EDF7275F isolated gate drivers (EiceDRIVER™)
  - XMC1404 microcontroller
  - ICE5QSAG CoolSET™ Quasi Resonant (QR) flyback controller
  - 950 V CoolMOS™ P7 (IPU95R3K7P7) superjunction (SJ) MOSFET

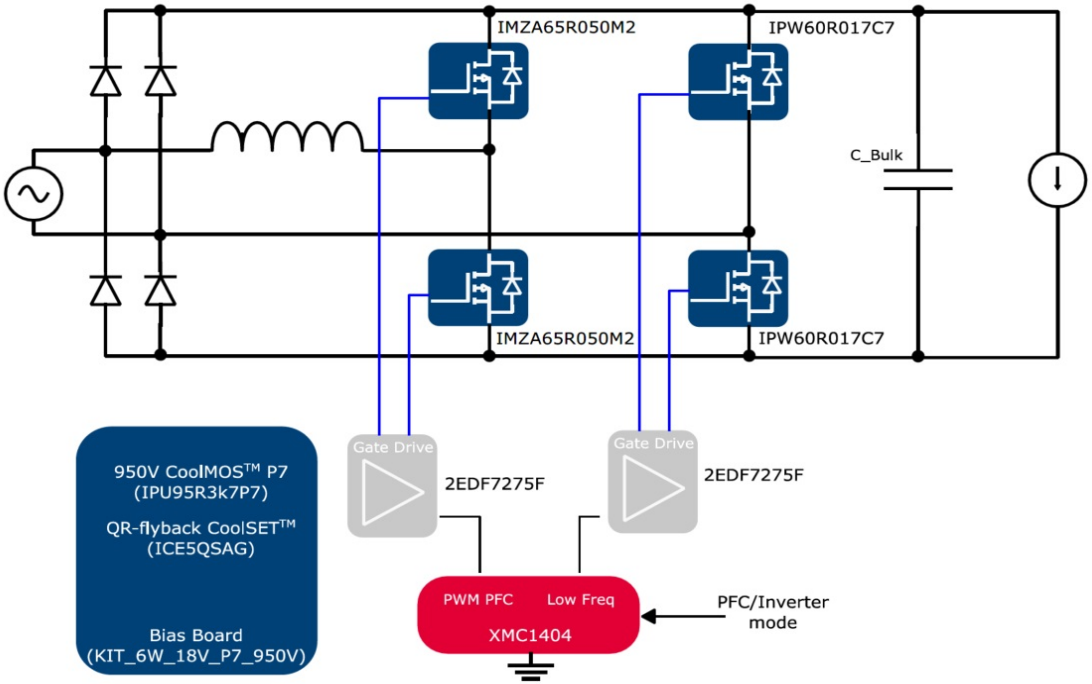

Copyright © Infineon Technologies AG 2024. All rights reserved.

Board placement overview

- Placement of the different sections in the 3300 W bridgeless totem-pole PFC with Infineon 650 V CoolSiC™ and 600 V C7 CoolMOS™ MOSFETs and XMC™ control.
- 208 mm long, 89 mm width and 40 mm (1U) height
  - Power density: 73 W/in^3

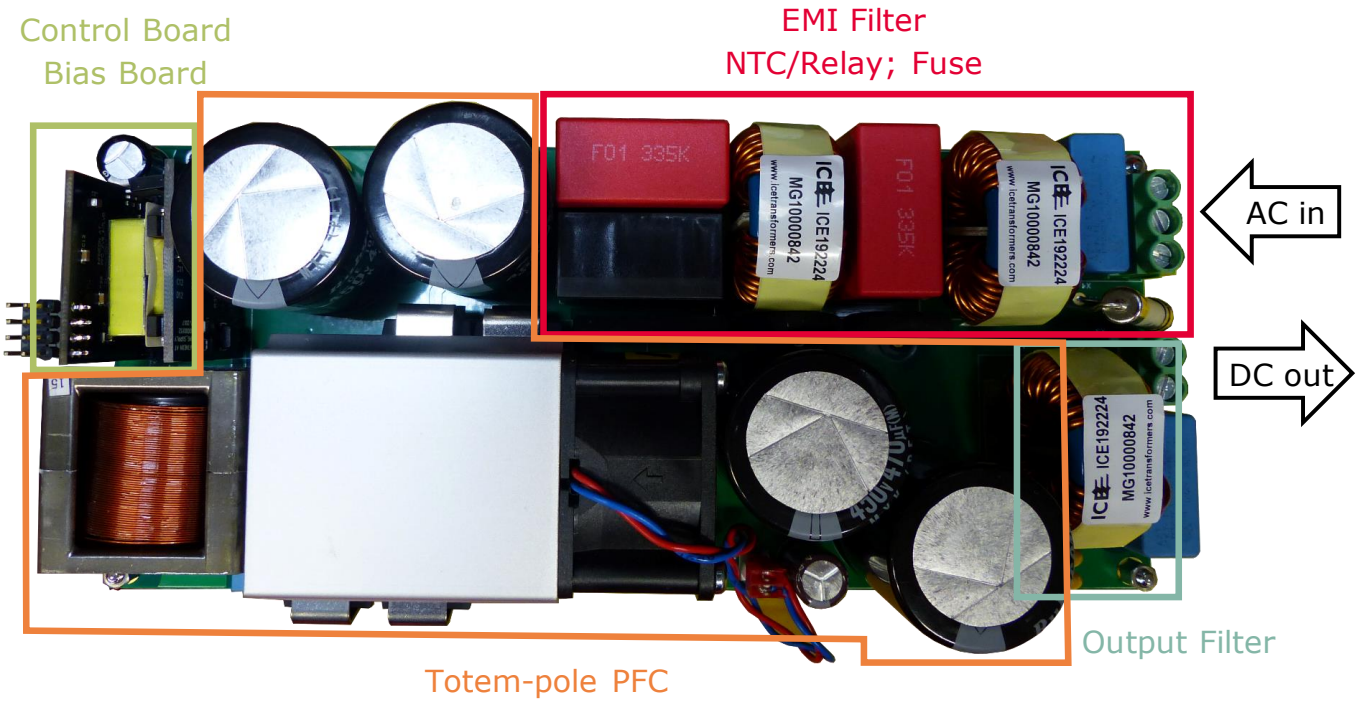

Copyright © Infineon Technologies AG 2024. All rights reserved.

Table of content

1 Introduction

2 Digital control for totempole PFC

3 PFC mode specifications and measurements

4 Inverter mode specifications and measurements

5 Summary

Copyright © Infineon Technologies AG 2024. All rights reserved.

Digital control for totempole PFC

- Block diagram of the sensing circuitry required for bidirectional totem-pole control with XMC™.
- Control reference in the AC rail in series with the PFC choke.
  - Positive and negative voltage in CS+
  - Offset and SW manipulation required
- Current loop structure with duty feed-forward and the required current manipulation.

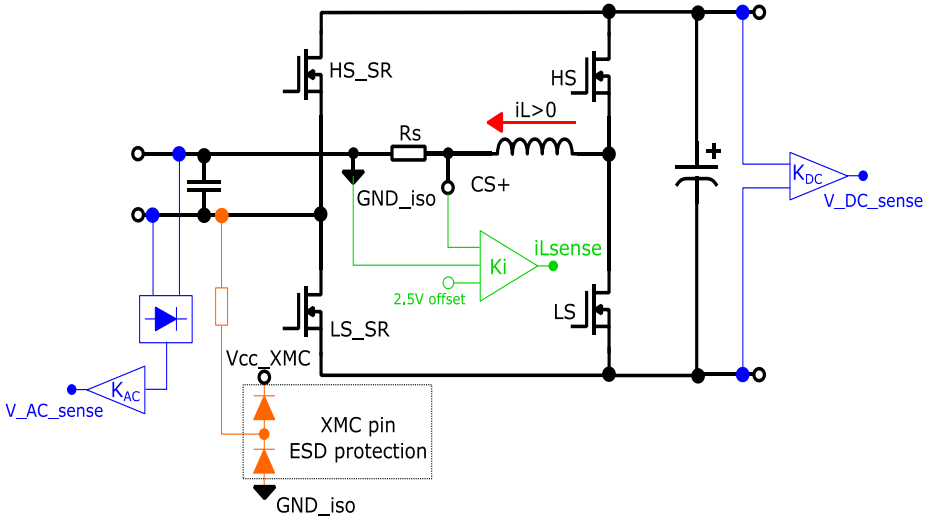

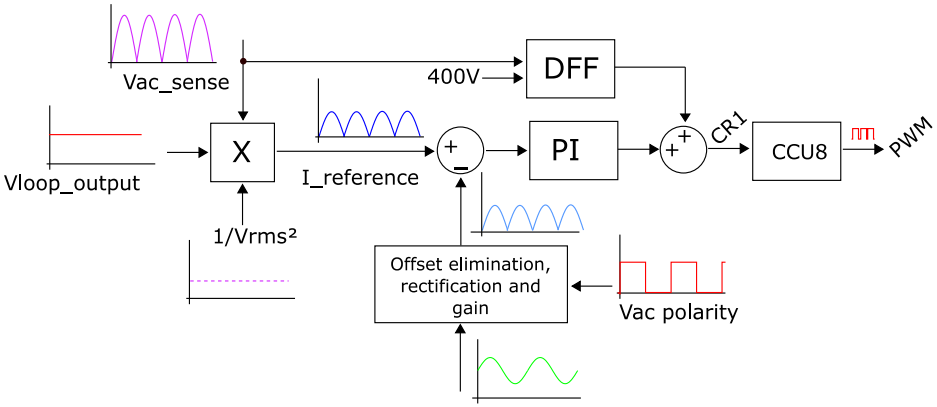

Copyright © Infineon Technologies AG 2024. All rights reserved.

Graphical user interface

- To be used with XMC™ Link isolated debug probe

  - Linear dead time modification with sensed current
  - Control of output power in Inverter operation

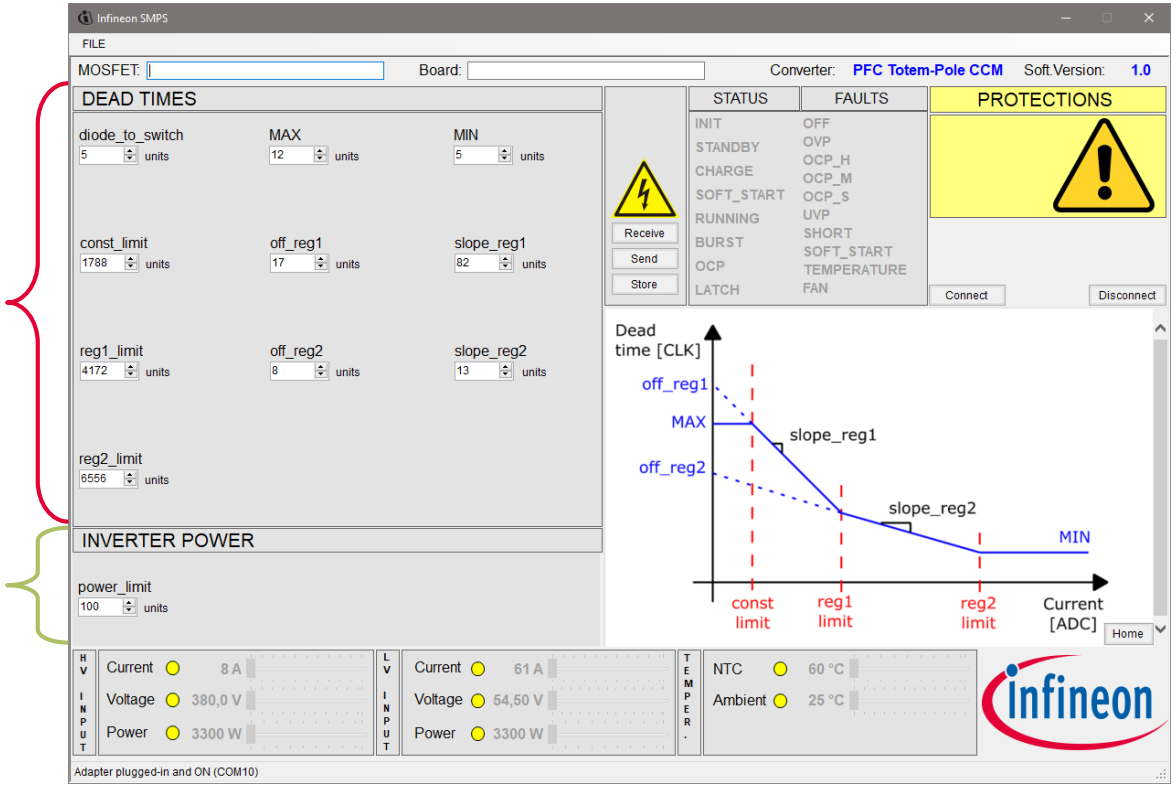

Copyright © Infineon Technologies AG 2024. All rights reserved.
Infineon Proprietary

Table of content

1 Introduction

2 Digital control for totempole PFC

3 PFC mode specifications and measurements

4 Inverter mode specifications and measurements

5 Summary

Copyright © Infineon Technologies AG 2024. All rights reserved.

Summary of specifications and test conditions: PFC mode

Test		Conditions	Specification	
Efficiency test		230 Vrms, 50 Hz/60 Hz	η_{pk} = 99.2 percent at 1650 W (50 percent load)	
Current THD		230 Vrms, 50 Hz/60 Hz	THDi less than 10 percent from 10 percent load	
Power factor		230 Vrms, 50 Hz/60 Hz	PF more than 0.95 from 20 percent load	
Rated DC voltage			400 V	
Steady-state V_{out} ripple		230 Vrms, 50 Hz/60 Hz, 100 percent load	$\lvert\Delta V_{out}\rvert$ less than 20 $V_{pk\text{-}pk}$	
In-rush current		230 Vrms, 50 Hz/60 Hz, measured on the first AC cycle	I_{in_peak} less than 30 A	
Power line disturbance	AC lost (hold-up time)	230 Vrms, 50 Hz, 10 ms at 100 percent load, 20 ms at 50 percent load	V_{out_min} = 300 V (UVP)	No damage: * PFC soft-start if bulk voltage under 300 V * PFC soft-start if AC out of range for certain time
	Voltage sag	200 Vrms, 50 Hz/60 Hz, different sag conditions, 100 percent load		
Brown-out	AC voltage		174 V on; 168 V off	
Load transient		7.4 A (90 percent) ↔ 0.8 A (10 percent), 0.2 A/µs	V_{out_min} = 300 V (UVP) V_{out_max} = 450 V (OVP)	
OCP			Peak current limit 40 A	
			AVG current limit 28 A	

Copyright © Infineon Technologies AG 2024. All rights reserved.

Efficiency, current THD and PF measurements PFC mode

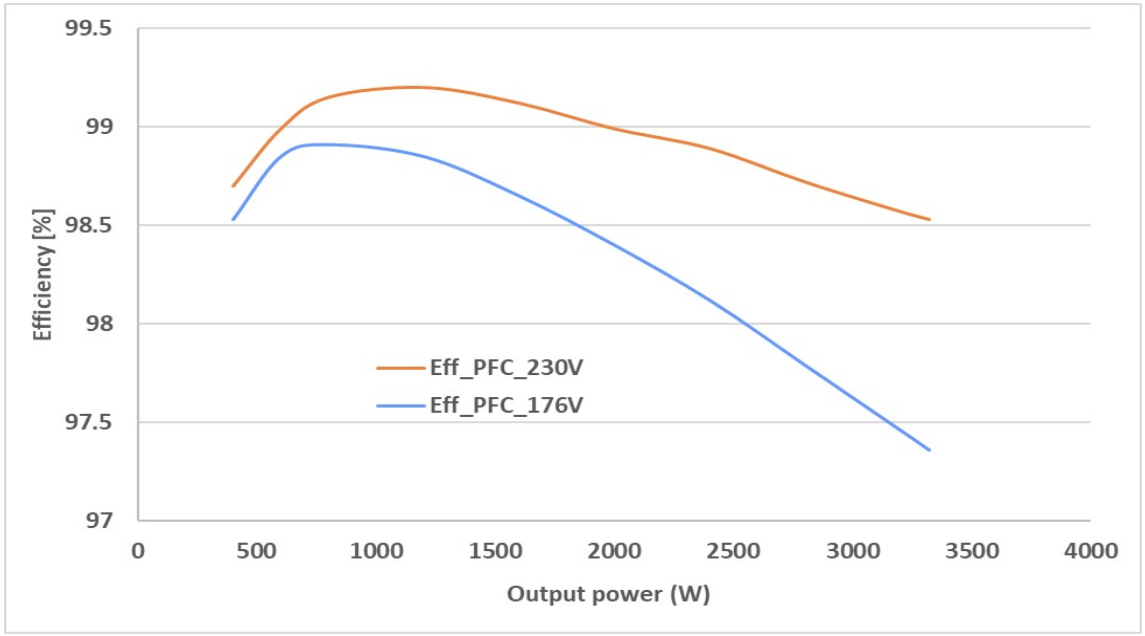

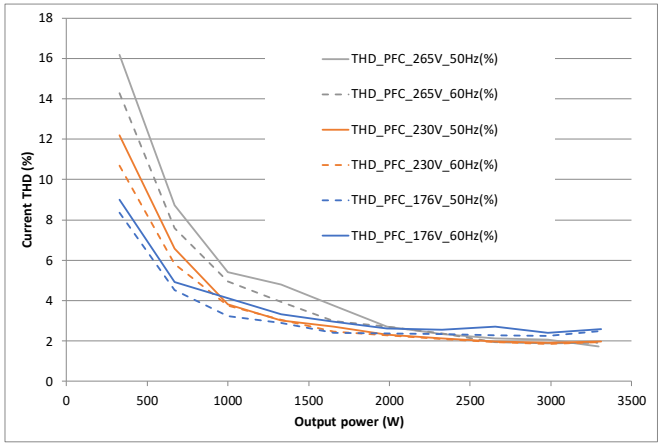

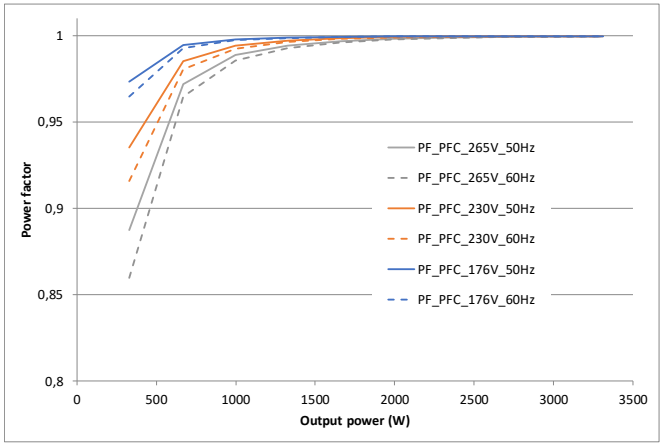

Copyright © Infineon Technologies AG 2024. All rights reserved.

LCDO and voltage sag in PFC mode

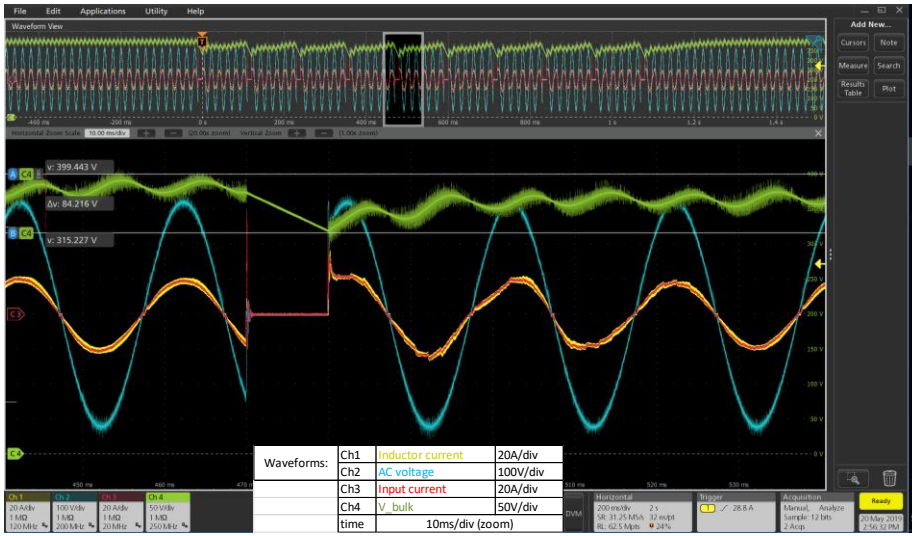

› 10 ms LCDO test at 230 V AC, 50 Hz and 100% load with starting angle of 45 degrees

› 500 ms, 130 Vrms voltage sag at full load

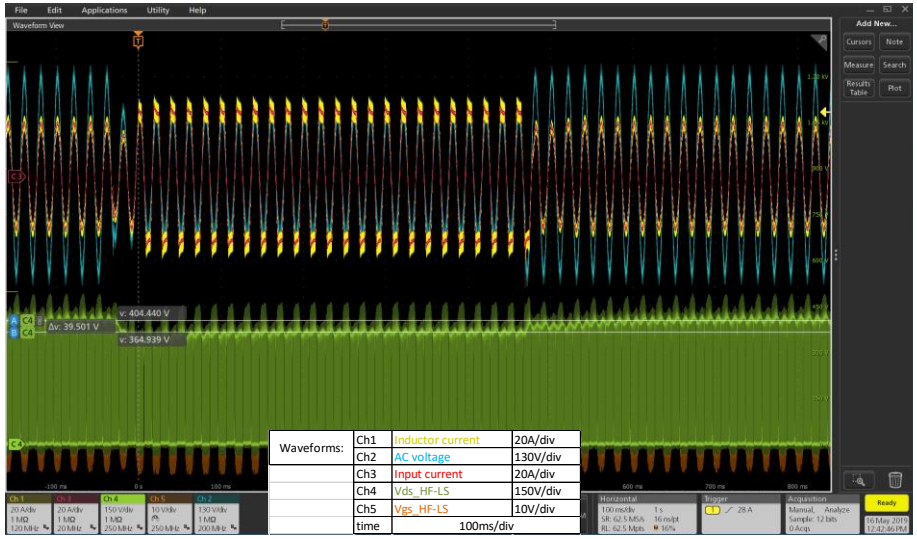

Copyright © Infineon Technologies AG 2024. All rights reserved.

Table of content

1 Introduction

2 Digital control for totempole PFC

3 PFC mode specifications and measurements

4 Inverter mode specifications and measurements

5 Summary

Copyright © Infineon Technologies AG 2024. All rights reserved.

Inverter mode selection and specifications

- Inverter or PFC mode are selected with a switch in the main board, before the converter starts
- Tested with bidirectional ZVS PSFB DC-DC converter EVAL_3K3W_BIDI_PSFB
- Summary of specifications and test conditions:

  PFC mode

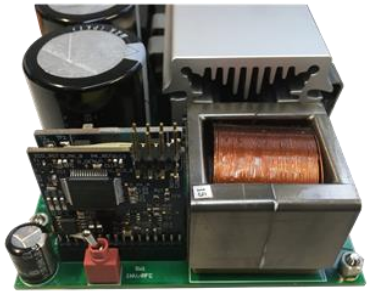

INV/PFC Switch

Test		Conditions	Specification
Rated DC voltage			400 V
AC voltage		Relay off after 100ms	174 V on; 168 V off
DC voltage			Low range: 390 V on, 350 V off/latching
			High range: 410 V on, 450 V off/latching
Load transient			Soft change between received power commands
Power line disturbance	AC lost	230 Vrms, 50 Hz, 2 ms, load independent	Inverter resumes operation with soft-start after AC returns to range.
	Voltage sag	100 ms under 170 V, load independent	Inverter off and restarts after a defined time with soft-start when AC returns to range.

Copyright © Infineon Technologies AG 2024. All rights reserved.

Efficiency, current THD and PF measurements Inverter mode

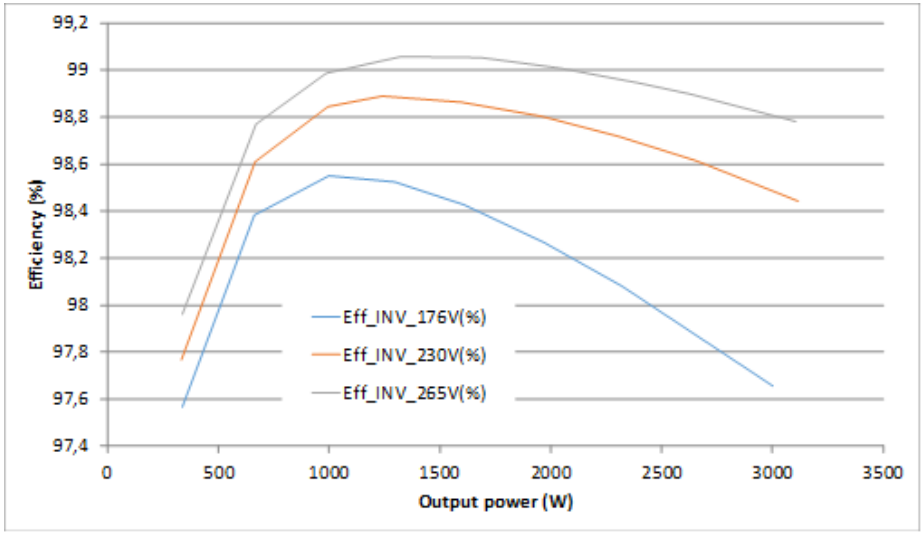

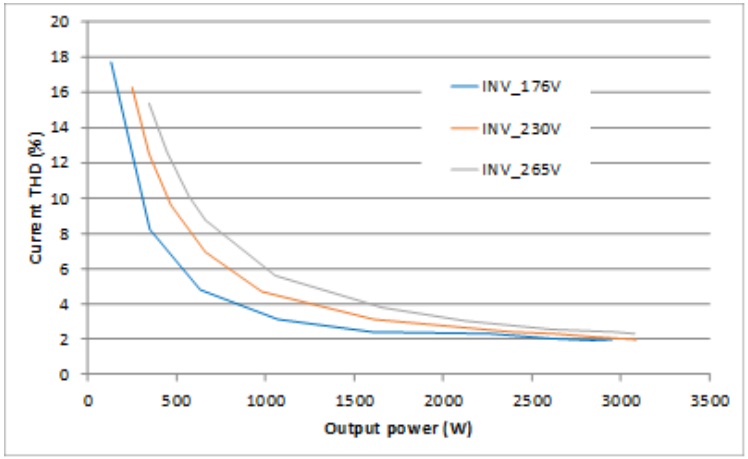

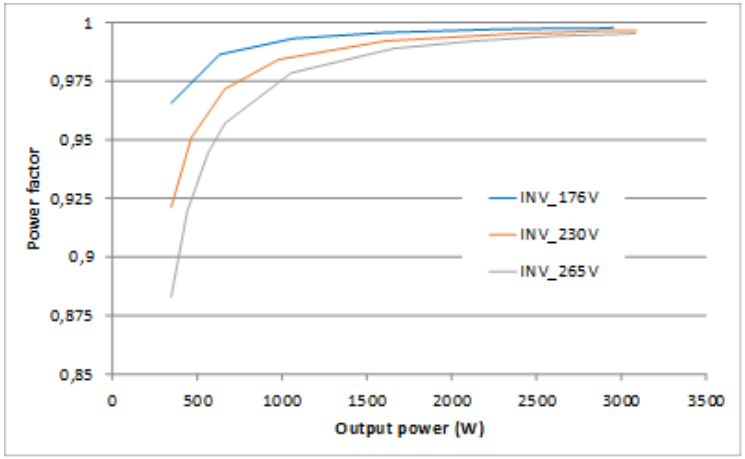

Copyright © Infineon Technologies AG 2024. All rights reserved.

PFC vs. Inverter mode steady state waveforms

› 230 V, 50 Hz at 50% load operation (1.65kW) in PFC (left) and inverter (right) mode

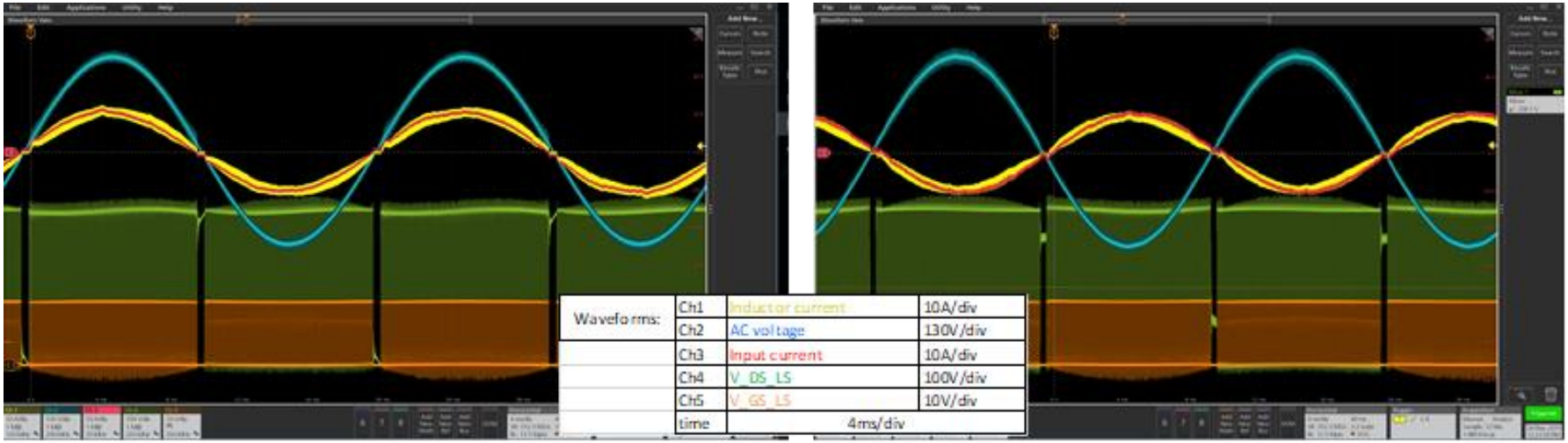

Copyright © Infineon Technologies AG 2024. All rights reserved.

Table of content

1 Introduction

2 Digital control for totempole PFC

3 PFC mode specifications and measurements

4 Inverter mode specifications and measurements

5 Summary

Copyright © Infineon Technologies AG 2024. All rights reserved.

Summary

- EVAL_3K3W_TP_PFC_SIC2, Infineon system solution for bridgeless totempole PFC enabled by using Infineon 650 V G2 CoolSiC™ silicon carbide MOSFET :
  - Peak efficiency of 99.2%
  - 1U form factor and a power density of 73W/in^3
  - PFC operation complies with power line disturbance and hold-up time.
- Digital control (XMC™ 1400 series) enables the utilization of the inherent bidirectional power flow capability of the bridgeless totempole topology
  - The power flow is selected before starting the board, by using an incorporated switch in the main board.
  - Dynamic change in the power flow is not implemented in the board.
- The EVAL_3K3W_TP_PFC_SIC2 board has been tested using programmable AC source and electronic load in PFC mode.
- Bidirectional DC-DC phase-shift full-bridge board from Infineon (EVAL_3K3W_BIDI_PSFB) has been used for inverter test.
- GUI communication for dead time modification and inverter power level

Copyright © Infineon Technologies AG 2024. All rights reserved.



Part of your life. Part of tomorrow.